ALT AMS M Series

Blade Fuses – 32V~80V

Specification for approval

规格承认书



产品名称：ALT 32V~80V AMS M系列 小号插栓车用保险丝

Product Type: ALT 32V~80V AMS M Series Bolt Auto Fuse

ALT AMS M Series

Blade Fuses – 32V~80V

1 适用范围 Scope of application

1.1 汽车照明，音响，汽车防盗器，充电保护，电池管理系统保护, UPS 等汽车低压电路，其他低压电子产品，小型变压器，电动玩具，充电器等。各颜色标示的安培值易辨认更换。

Suitable for auto lighting, auto guard against theft,Charging protection,BMS Protection,UPS etc Also applied to low voltage electronic products, little transformers, electronic toys, chargers and so on. Blade fuses are color-coded for easy amperage identification. Instead.

1.2 AOLITTEL AMS系列电动汽车保险丝经过特殊设计和测试，可在保护电动汽车和混合动力电动汽车的大功率电池充电和管理系统方面提供一流的保护性能，额定电流从10A到300A，最高可达32V-80VDC。

AOLITTEL AMS series EV fuses are specially engineered and tested to provide best-in-class protection performance in protecting high power battery charging and managing systems of Electrical Vehicles and Hybrid Electrical Vehicles, up to 32V-80VDC in ratings from 10A to 300A.

2 功能特性 Features

电压：32V-80 VDC Automotive fuse

电流：Rated Current: 10-300 A

螺栓尺寸：Bolt Size: M6/M5

扭矩：Torque: M6:12N.m

使用温度：Operating Temperature: -40 to 125℃ degrees

分断：Rated Breaking Capacity: 2.5 kA at 32V-80 VDC

适配保险丝座：ANS-H;BHR059-25-M6; BHR051-25- M8; BFR050-28-M6

Recommended fuse holder: ANS-H;BHR059-25-M6; BHR051-25- M8; BFR050-28-M6

3 相关标准及认证 Relevant Standards and Certification

3.1 执行标准 Standards：UL248, ISO8820-5, IATF 16949

3.2 认证 Certification：

证书 Certification	认证范围 Scope of Certification	证书编号 Certification No.
CE	10A~300A	SZEM2412011065BAV
ROHS	10A~300A	CANEC26013537704

ALT AMS M Series

Blade Fuses – 32V~80V

4 结构及尺寸 Structure and Size (unit: mm)

示列图 Display



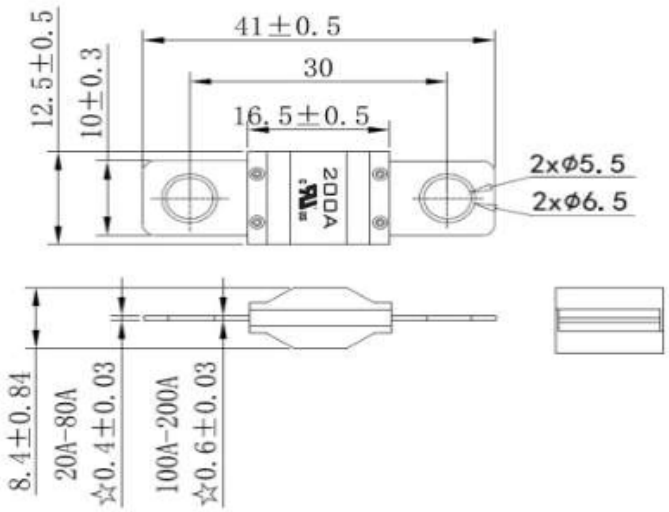

5 原材料明细 Material Details

编号 No.	零件名称 Part Name	材质 Material
①	塑料外壳 Plastic crust	PA66 塑料 PC Plastic
②	铜带 Copper piece	铜 Copper

6 标示和外观 Marking and appearance

6.1 保险丝上的标记应清晰 The marking on the fuse should be clear.

6.2 保险丝塑料外壳应有如下标记:There should be the following marks on the fuse:
额定电流 Rated current: **150A(示例Display)**

6.3 保险丝外观干净无污点、氧化等，塑料外壳应无破裂。污染等现象。
The appearance of the fuse should be clean and have no stain , oxidizing , etc . The plastic crust Should not have been broken， polluted etc.

7 电气特性 Electrical characteristics

7.1 实验条件 Test condition

所有测试环境温度25±5℃。

All electrical characteristics tests are conducted at an ambient temperature of 25±5℃.

7.2 塑料外壳颜色:黑 Plastic crust color : Black(示例Display)

ALT AMS M Series

Blade Fuses – 32V~80V

7.3 时间-电流特性 Time-Current Characteristics

额定电流的% % of ampere rating	额定电流 Rated current	熔断时间 Opening time
75%	300A-500A	>4H
100%	40A-250A	>4H
135%	40A-250A	2-30min
200%	40A-250A, 300A-500A	1s~15s
350%	40A-250A, 300A-500A	0.3s~5s
600%	40A-250A, 300A-500A	0.1s~1s

7.4 如需要特定电流时间测试，我们可提供对应实验数据 If specific current-time testing is required, we can provide corresponding experimental data

8 环境特性 Environmental characteristics

8.1 使用温度范围

Operating Temperature -40℃～125℃。

8.2 保存条件 Storage Conditions

相对湿度≤75%，可存放 3 年。 Relative humidity≤75%, store 3 years .

9 电气规格 – 表 1 Electrical Specifications-Table 1

Material number 物料编号	Current Rating 额定值	Melting I²t @10 In [A²s]	Voltage Drop Max. (mV)	Breaking Capacity	Volt 电压
AMS010M	**10**	170	140mV	**2.5KA**	**32V** **48V** **58V** **70V** **80V** **DC**
AMS015M	**15**	420			
AMS020M	**20**	680			
AMS025M	**25**	1100			
AMS030M	**30**	1710			
AMS035M	**35**	2900			
AMS040M	**40**	7600			
AMS050M	**50**	13000			
AMS060M	**60**	18500			
AMS070M	**70**	24000			
AMS080M	**80**	33500	120mV		
AMS100M	**100**	49000			
AMS125M	**125**	77100			
AMS150M	**150**	105000			
AMS200M	**200**	201000			
AMS225M	**225**	252000			
AMS250M	**250**	310000			
AMS300M	**300**	449000	85mV		

ALT AMS M Series

Blade Fuses – 32V~80V

10 包装 Packing

最小包装为：500 个 MOQ: 500PCS

重量预计 1.4KG Weight 1.4 KG

A. Plastic bags：	B. Outer carton：
L29.0±2 * W22.0±2	L43.5±5 * W27.5±5 * H19.5±5

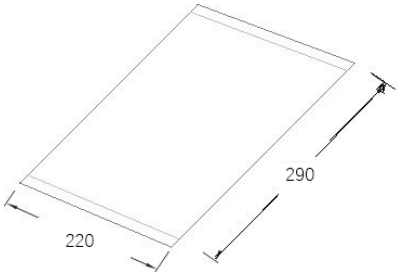

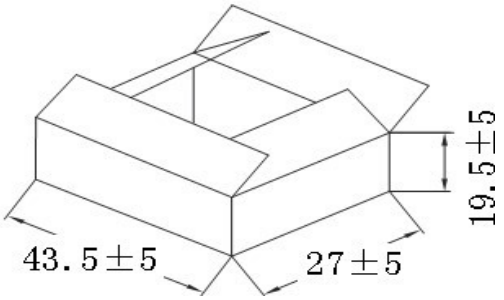

11 时间电流曲线图 Time- current curve.

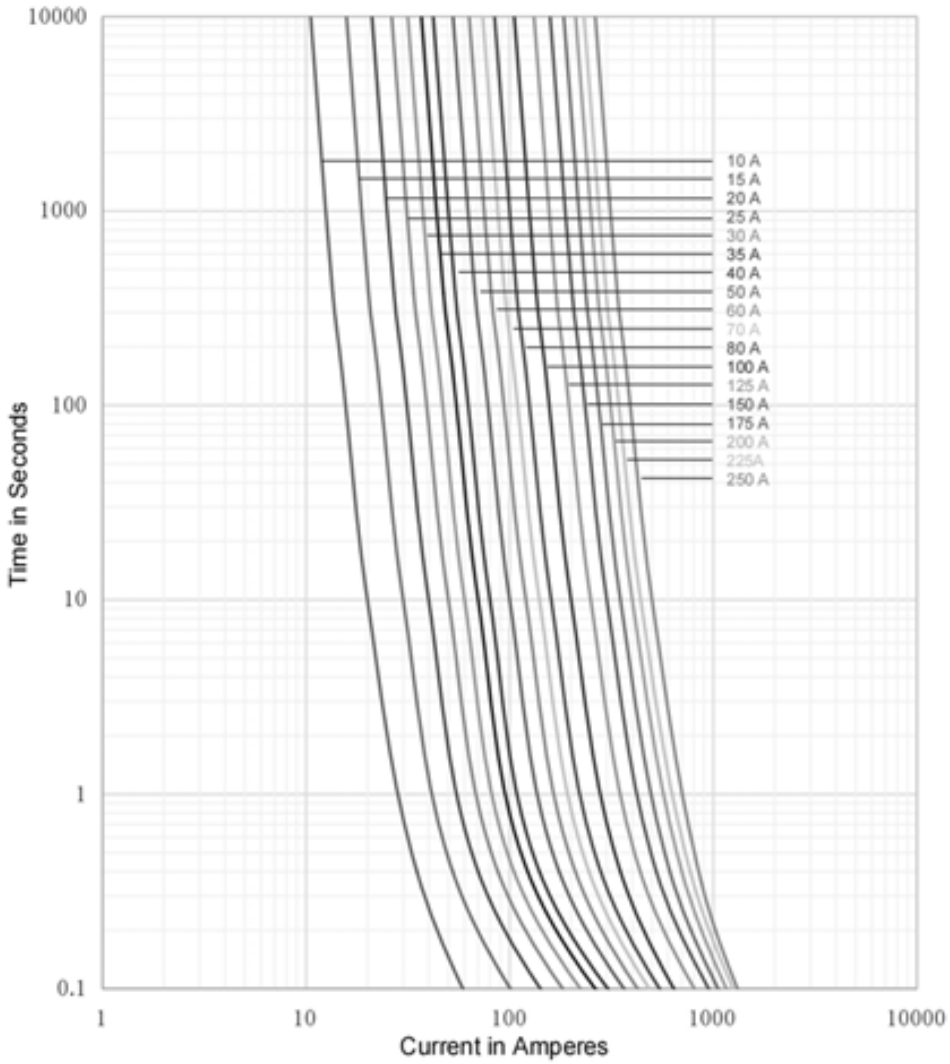

ALT AMS M Series

Blade Fuses – 32V~80V

Ordering Information:

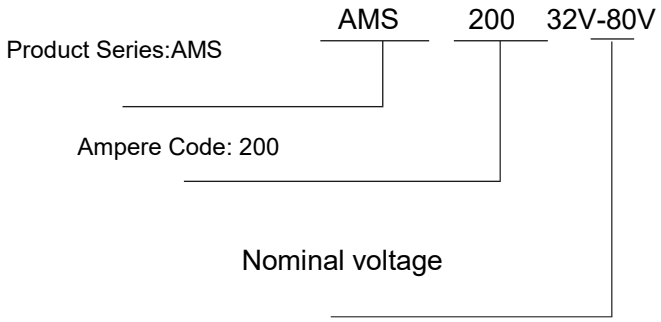

12 环保标准 Environmental standards

环保文件以附件附送，每年更新一次.

The environmental protection documents are attached and updated annually

13 其他 / Others

13.1 如果在使用中有超出本规格书的要求，须经双方协商确认。

In the event that an impropriety is found beyond this specification, it shall be fixed by mutual agreement between the parties.

13.2 如果本规格书有不适当的情况，须通过双方协商并由本公司修改。

In the event that an impropriety is found in this specification, AOLITTEL ELECTRONIC CO., LTD. shall amend it by mutual agreement between the parties.

14 CE证书 / Appendix I: CE certificates