ALT Square Series

Blade Fuses – 32V

Specification for approval

规格承认书



产品名称：ALT 32V 方形系列长内插车用保险丝

Product Type: ALT 32V Square Series Long Interpolation Auto Fuse

ALT Square Series

Blade Fuses – 32V

1 适用范围 Scope of application

汽车照明，音响，汽车防盗器 等汽车低压电路，其他低压电子产品，小型变压器，电动玩具，充电器等。各颜色标示的安培值易辨认更换。

Suitable for auto lighting, auto guard against theft, etc Also applied to low voltage electronic products, little transformers, electronic toys, chargers and so on. Blade fuses are color-coded for easy amperage identification. Instead.

2 相关标准及认证 Relevant Standards and Certification

2.1 执行标准 Standards：ISO8820-3,SAE J2077, JAS0 D612, QC/T420-2004

2.2 认证 Certification：

证书 Certification	认证范围 Scope of Certification	证书编号 Certification No.
CE	20A~120A	SZEM2412011065BAV
ROHS	20A~120A	CANEC26013537704

3 结构及尺寸 Structure and Size (unit: mm)

示列图 Display



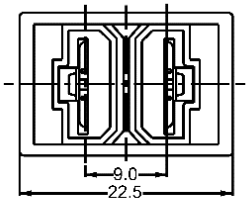

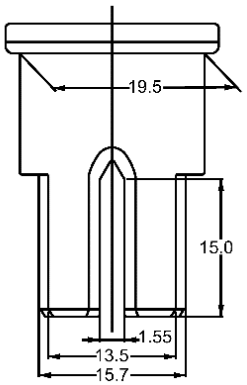

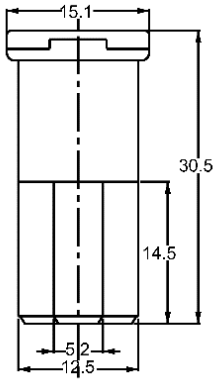

4 原材料明细 Material Details

编号 No.	零件名称 Part Name	材质 Material
①	塑料外壳 Plastic crust	PA66 塑料 PA66 Plastic
②	铜 Copper	铜合金 Copper alloy

ALT Square Series
Blade Fuses – 32V

5 标示和外观 Marking and appearance

5.1 保险丝上的标记应清晰 The marking on the fuse should be clear.

5.2 保险丝塑料外壳应有如下标记:There should be the following marks on the fuse:
额定电流 Rated current: **20A(示例Display)**

5.3 保险丝外观干净无污点、氧化等，塑料外壳应无破裂。污染等现象。
The appearance of the fuse should be clean and have no stain , oxidizing , etc . The plastic crust Should not have been broken， polluted etc.

6 电气特性 Electrical characteristics

6.1 实验条件 Test condition
所有测试环境温度25±5℃。
All electrical characteristics tests are conducted at an ambient temperature of 25±5℃.

6.2 塑料外壳颜色:蓝 Plastic crust color : Blue**(示例Display)**

6.3 时间-电流特性 Time-Current Characteristics

额定电流的% % of ampere rating	额定电流 Rated current	熔断时间 Opening time
110%	20A-120A	>4H
135%	20A-120A	30s~3600s
200%	20A-120A	5s~100s
350%	20A-120A	0.2s~7s
600%	20A-120A	0.04s~1s

6.4 如需要特定电流时间测试，我们可提供对应实验数据 If specific current-time testing is required, we can provide corresponding experimental data

7 环境特性 Environmental characteristics

7.1 PC材质使用温度范围
Operating Temperature -40℃～125℃。

7.2 保存条件 Storage Conditions
相对湿度≤75%，可存放 3 年。 Relative humidity≤75%, store 3 years .

ALT Square Series
Blade Fuses – 32V

8 安培额定值和保险丝颜色代码 – 表 1 Rating And Fuse Color Code-Table 1

颜色之近似或有变化未能告知，以产品顶盖数字标示为准. If there is any approximation or change in color, please refer to the numerical indication on the top cover of the product for accuracy.

Material number 物料编号	Current Rating 额定值	Housing Color 颜色	Volt 电压
ALT23NQ-020	**20**		**32VDC**
ALT23NQ-030	**30**		
ALT23NQ-040	**40**		
ALT23NQ-050	**50**		
ALT23NQ-060	**60**		
ALT23NQ-070	**70**		
ALT23NQ-080	**80**		
ALT23NQ-090	**90**		
ALT23NQ-100	**100**		
ALT23NQ-120	**120**		

9 包装 Packing

最小包装为：1000 个 MOQ: 1000PCS

重量预计 1.4KG Weight 1.4 KG

A. Plastic bags：	B. Outer carton：
L29.0±2 * W22.0±2	L43.5±5 * W27.5±5 * H19.5±5

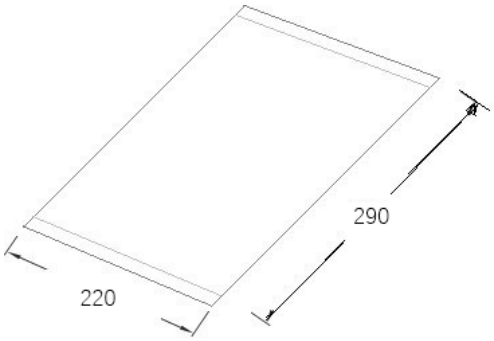

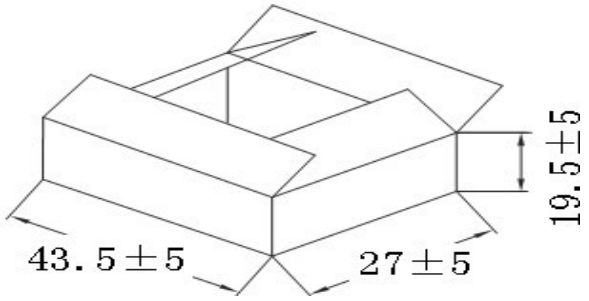

ALT Square Series
Blade Fuses – 32V

10 时间电流曲线图 Time- current curve.

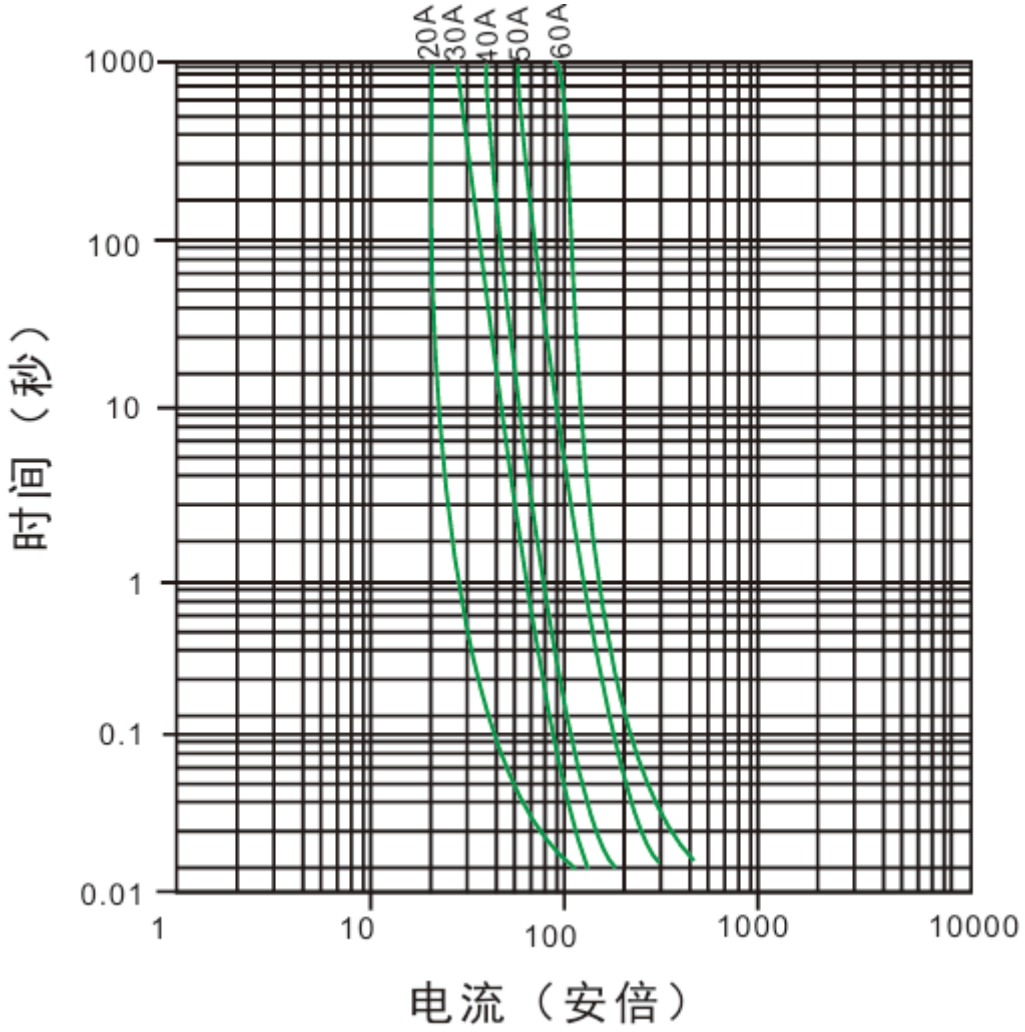

11 环保标准 Environmental standards

环保文件以附件附送，每年更新一次.
The environmental protection documents are attached and updated annually

12 其他 / Others

12.1 如果在使用中有超出本规格书的要求，须经双方协商确认。
In the event that an impropriety is found beyond this specification, it shall be fixed by mutual agreement between the parties.

12.2 如果本规格书有不适当的情况，须通过双方协商并由本公司修改。
In the event that an impropriety is found in this specification, AOLITTEL ELECTRONIC CO., LTD. shall amend it by mutual agreement between the parties.

13 CE证书 / Appendix I: CE certificates